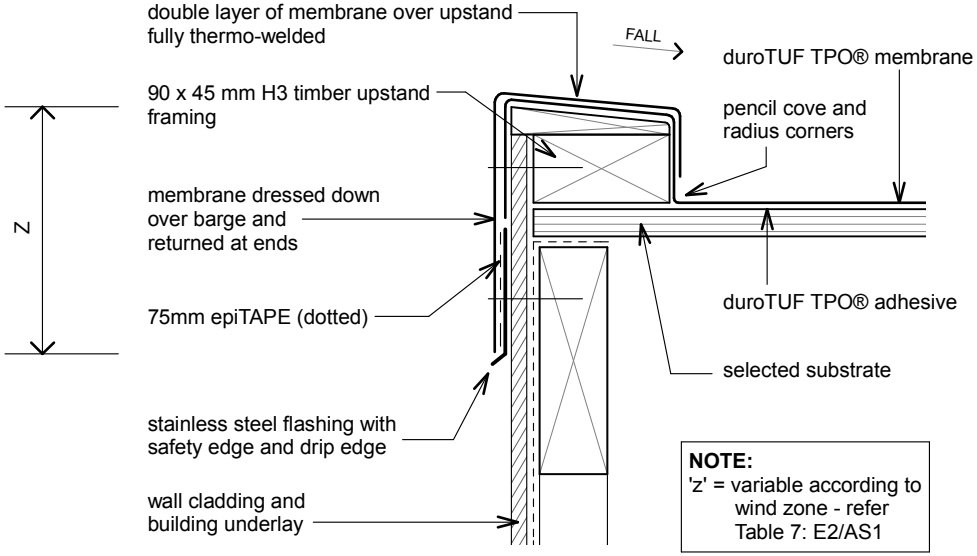

duroTPO-T15 - Barge Board Type 3

Revision: 10 August 2016